REVISIONS				
ZONE	REV.	DESCRIPTION	DATE	APPROVED
	A		10/25/2015	

NOTES

1. MATERIAL: AL AL 6061 T6
2. REMOVE BURS AND SHARP EDGES.
3. FILLET R0.3 MAX UNLESS OTHERWISE SPECIFIED.
4. FINISH: ANODIC COATING DYED BLACK 12 MICRON.

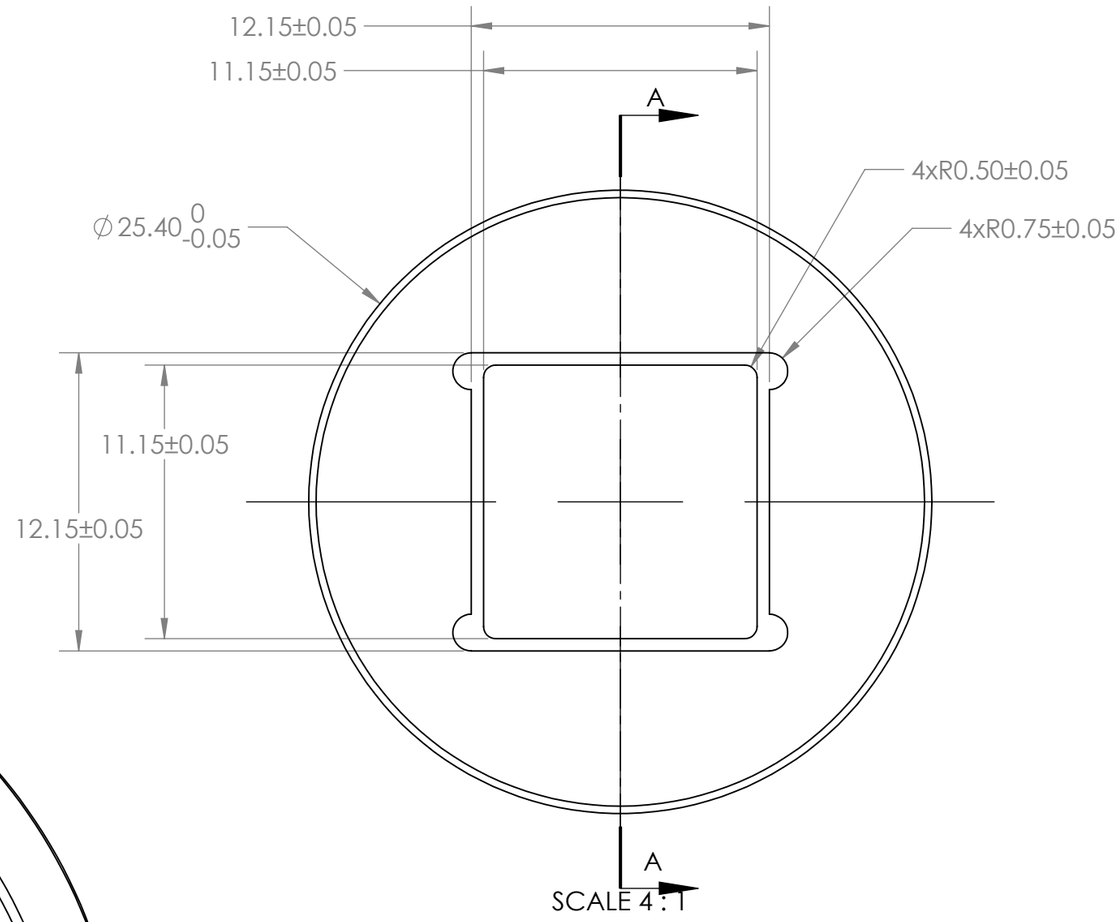

SCALE 4 : 1

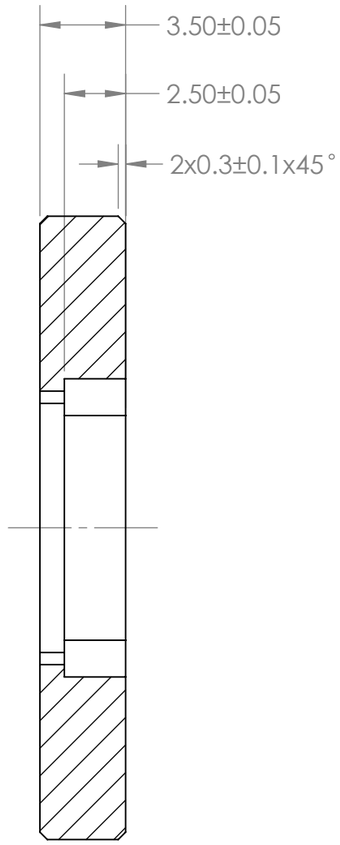

SECTION A-A
SCALE 4 : 1

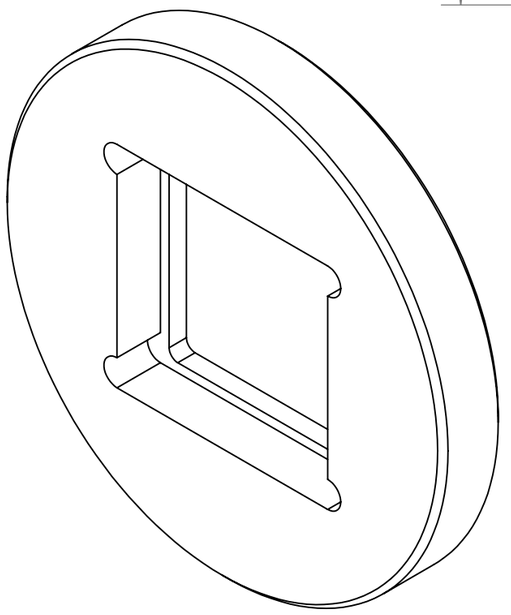

SCALE 4 : 1

UNLESS OTHERWISE SPECIFIED:
DIMENSIONS ARE IN MILLIMETERS
SURFACE FINISH:
TOLERANCES:
LINEAR: ±0.1
ANGULAR: ±0.5°

FINISH:

DEBUR AND BREAK SHARP EDGES

DO NOT SCALE DRAWING

REVISION A

THIS DRAWING IS THE PROPERTY OF HOLO/OR.
DUPLICATION OR SUBMISSION TO THIRD PARTIES
REQUIRES HOLO/OR'S WRITTEN CONSENT.

	NAME	SIGNATURE	DATE
DRAWN	G.S.		6/12/15
CHK'D	L.S.		6/12/15
APPV'D			
MFG			
Q.A			

HOLO/OR

TITLE: Adapter for square 12x12mm to 1" dia

MATERIAL:

WEIGHT:

DWG/PART NO. AD SQ04 T01

A3

SCALE:10:1

SHEET 1 OF 1